Volts	kVAr	Amps	Wire
208	14.7	40.8	#5 TEW to each 5kVAr cap and #10 TEW to each 10kVAr cap
	19.5	54.2	
	24.4	67.7	
	29.3	81.3	
	34.2	94.9	
	39.0	108.2	
480	30.0	36.0	#10 TEW
	35.0	42.0	#10 TEW
	40.0	48.0	#10 TEW
	45.0	54.0	#8 TEW
	50.0	60.0	#8 TEW
	60.0	72.0	#10 TEW
	65.0	78.0	#8 TEW
	70.0	84.0	#8 TEW
	75.0	90.0	#8 TEW
600	30.0	28.9	#10 TEW
	35.0	33.7	#10 TEW
	40.0	38.5	#10 TEW
	45.0	43.3	#10 TEW
	50.0	48.1	#10 TEW
	55.0	53.0	#10 TEW
	60.0	57.8	#10 TEW
	65.0	62.5	#10 TEW
	70.0	67.4	#10 TEW
	75.0	72.2	#10 TEW

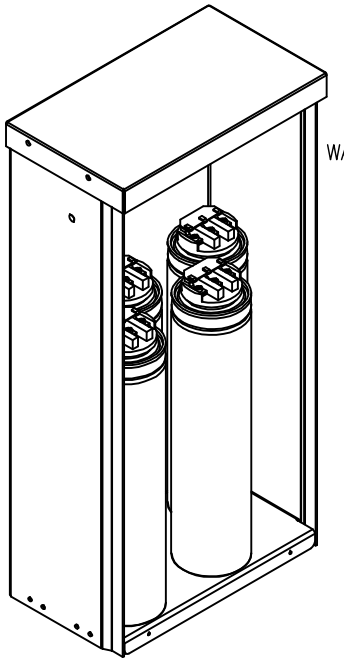

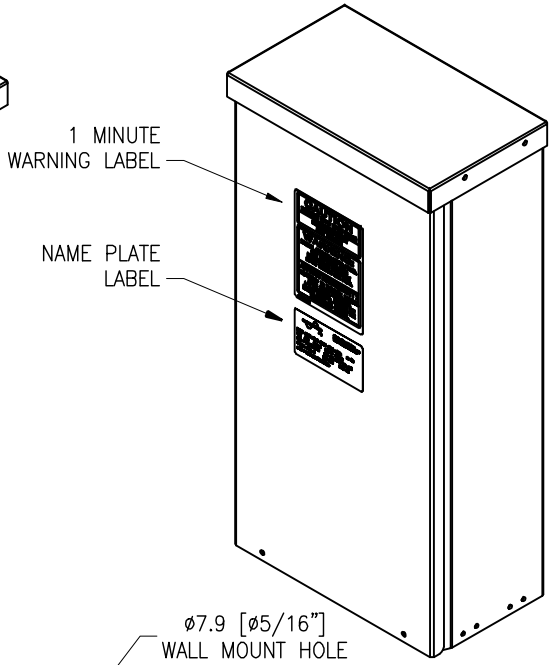

5 MINUTE WARNING LABEL, SUPPLIED LOOSE, TO BE PLACED ON CAPACITOR DISCONNECT ENCLOSURE

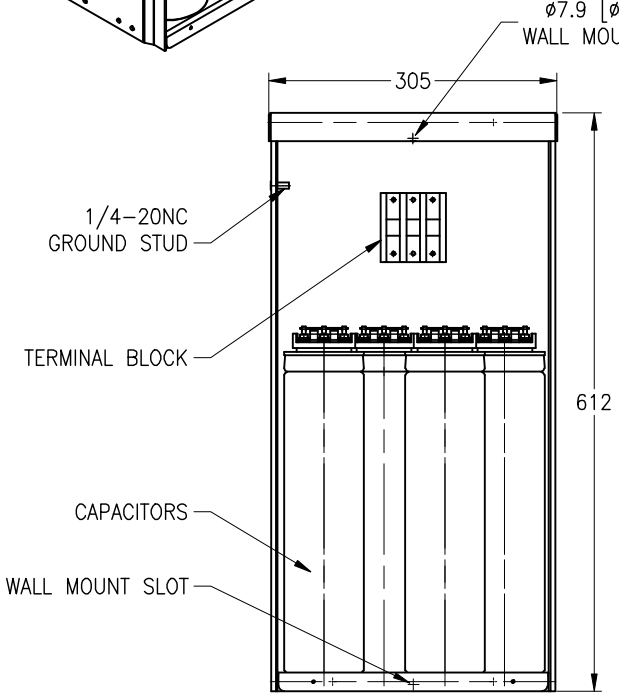

FRONT VIEW

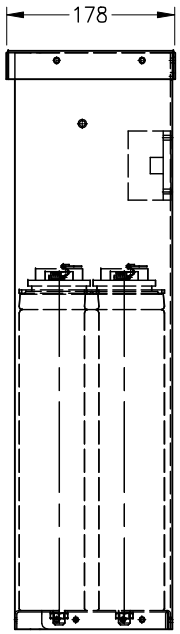

RIGHT SIDE VIEW

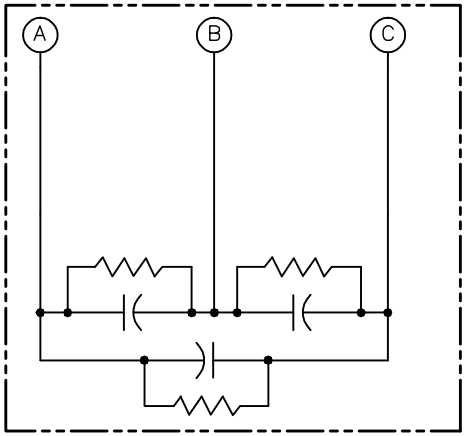

SCHEMATIC DIAGRAM

Notes:
1. Discharge resistors provided.
2. NEMA 3R Galvanized enclosure.
3. Floor mounting brackets provided on request.
4. All dimensions in mm unless noted otherwise.

This drawing is the property of Electrotek Ltd. The information and technology herein may not be used nor reproduced without the written permission of Electrotek Ltd.
All reproductions, in whole or in part, including shop drawings, shall refer to this clause.

Revised: 10/02/09

Title: Typical Packaged Capacitor

Model: R500

ELECTROTEKLTD

1016 34 AV SE Calgary, AB
T2G 1V4 Canada
Tel: 403 287 2200 Fax: 403 287 3808
contact@electrotekltd.com
www.electrotekltd.com